# S. 50-906

**Ideal choice for very heavy transportation.**
**Assembling belt for cars and truck loading systems.**
**FDA approved.**

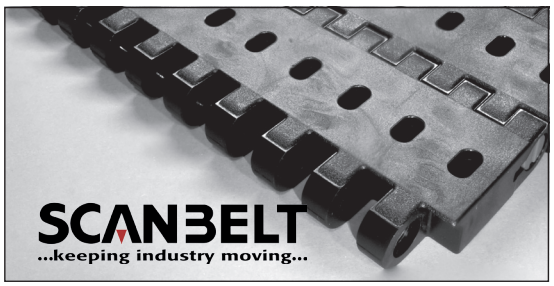


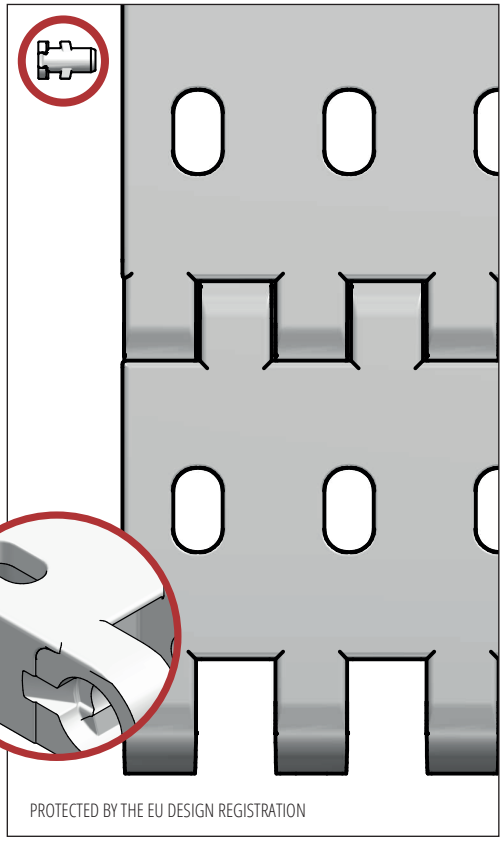

PROTECTED BY THE EU DESIGN REGISTRATION

## SUGGESTED INDUSTRIES

## STANDARD FEATURES

| | |
|---|---|
| Belt surface | Perforated flat top |
| Open area | 13 %. Biggest opening 7 x 11 mm |
| Strength | Ideal choice for very heavy-duty transportation |
| Cleanability | Good |
| Standard width | Increments of 20 mm, e.g. 100, 120 mm etc. |

## BELT DATA

| Belt materials | Temperature range | | Max. belt pull kg/m of width | Belt weight kg/m² | Belt weight kg/m² w. steel rods | Standard Colours |
|---|---|---|---|---|---|---|
| | Min. | Max. | | | | |
| PE | - 73 | 66 | 4800 | 14 | 20 | Black |
| PP | + 5 | 100 | 6000 | 14 | 20 | Black |
| POM | - 43 | 95 | 10250 | 21 | 27 | Black |
| | | | | | | |

## ACCESSORIES

| Type | mm |
|---|---|
| Flights | 25 |
| Scoop Flights | - |
| Bent Flights | - |
| Supported Flights | - |
| Comb Flights | 25, 50, 60 |
| Flights fitted with a Round Top | - |
| Moulded Side Guards | 40 |
| Friction Top | - |
| Hold-downs | - |

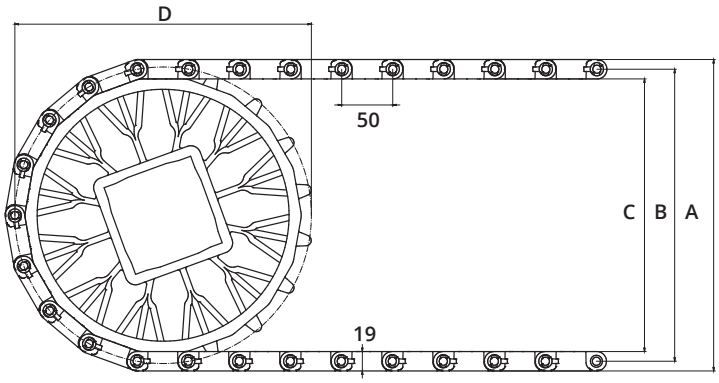


## SPROCKET DATA

A = Outside, B = Pitch, C = Inside, D = Pitch Circle Diameter

| No. Teeth | A | B | C | D | Hub Width | Round Bore | | Square Bore | |
|---|---|---|---|---|---|---|---|---|---|
| | mm | mm | mm | mm | mm | mm | Inch | mm | Inch |
| 12 | 207 | 188 | 169 | 195 | 40 | 40 / 60 | | 60 / 80 / 90 | |
| 16 | 273 | 254 | 235 | 259 | 40 | 40 / 60 | | 60 / 80 / 90 | |
| 18 | 307 | 288 | 269 | 291 | 40 | 40 / 60 | | 60 / 80 / 90 | |