S.50-801

**Ideal for medium-heavy duty transportation as seafood, meat & poultry or transportation of raw materials (for further processing).
FDA approved.**

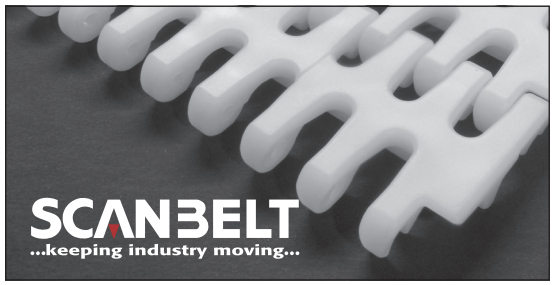

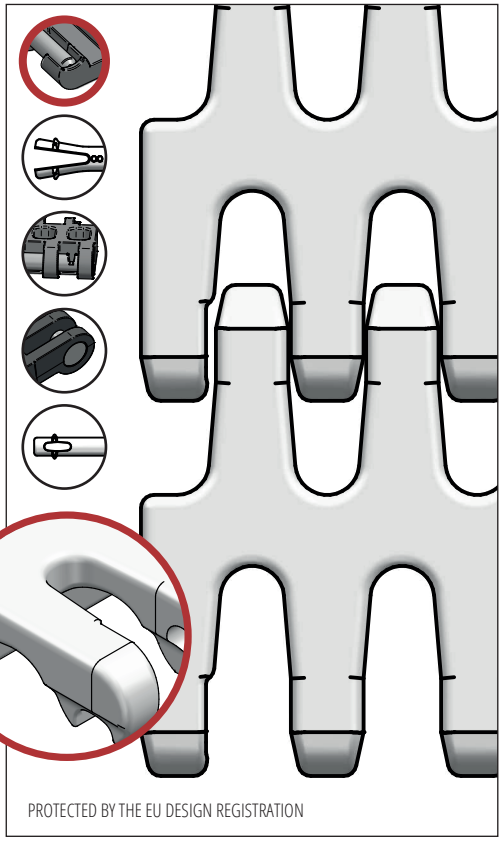

PROTECTED BY THE EU DESIGN REGISTRATION

SUGGESTED INDUSTRIES

STANDARD FEATURES

Belt surface	Perforated flat top
Open area	24 %. Biggest opening 10 x 12 mm
Strength	Ideal choice for medium to heavy-duty transportation
Cleanability	Excellent. FSIS
Standard width	Increments of 20 mm, e.g. 100, 120 mm etc.

BELT DATA

Belt materials	Temperature range		Max. belt pull kg/m of width	Belt weight kg/m²	Belt weight kg/m² w. steel rods	Standard Colours
	Min.	Max.				
PE	- 73	66	1200	7	11	Blue/Natural
PP	+ 5	100	1400	7	11	Blue/White/Grey
POM	- 43	95	2060	10	14	Blue/Natural

ACCESSORIES

Type	mm
Flights	3, 25*, 50*, 75*, 100*
Scoop Flights	50, 75, 100*, 150*
Bent Flights	75*, 100*
Supported Flights	75, 100, 150
Flights fitted with a Round Top	Yes
Side Guard	50, 75, 100, 150
Friction Top	Yes
Hold-downs	Yes

*Modules can be supplied with a moulded indent of 40 mm.

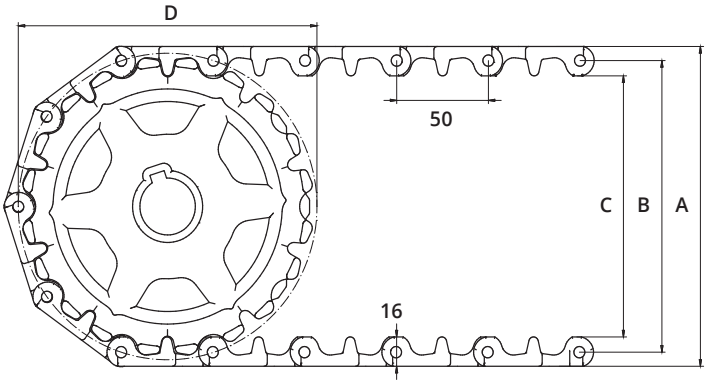

SPROCKET DATA

A = Outside, B = Pitch, C = Inside, D = Pitch Circle Diameter

No. Teeth	A	B	C	D	Hub Width	Round Bore		Square Bore	
	mm	mm	mm	mm	mm	mm	Inch	mm	Inch
6	104	89	73	100	20	20 / 25 / 30 / 40	¾ / 1 / 1¼	25 / 40	1½
8	137	122	106	132	35	25 / 30 / 40	1 / 1¼	25 / 40	1½
10	171	156	140	162	35	25 / 30 / 40 / 50 / 60 / 80	1 / 1¼	25 / 40 / 60	1½ / 2½
12	204	189	173	195	35	25 / 30 / 40 / 50 / 60 / 80	1 / 1¼	25 / 40 / 60 / 80	1½ / 2½